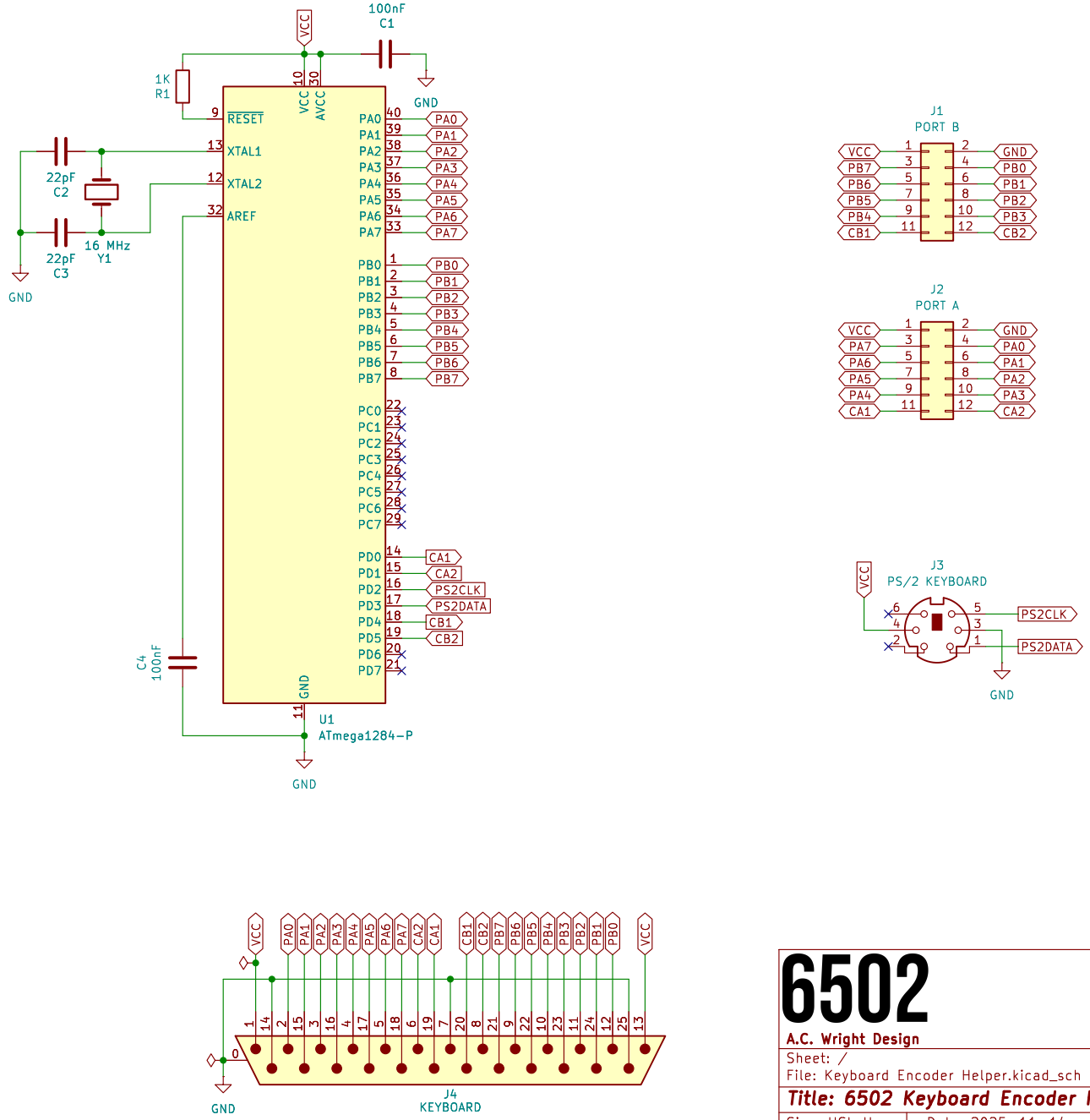

6502

A.C. Wright Design

Sheet: /

File: Keyboard Encoder Helper.kicad_sch

Title: 6502 Keyboard Encoder Helper

Size: USLetter	Date: 2025-11-14	**Rev: 1.0**
KiCad E.D.A. 9.0.7		Id: 1/1